THERMA-TRU® DOORS

Fiber-Classic® & Smooth-Star®

OPAQUE FIBERGLASS SINGLE DOOR w/ SIDELITE(S) in a COMPOSITE FRAME

INSWING/OUTSWING "IMPACT"

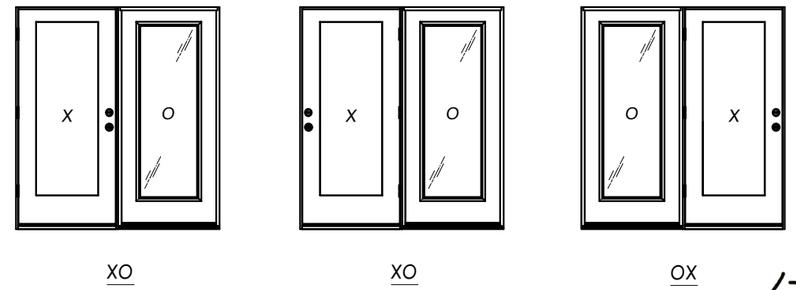

GENERAL NOTES

1. This product has been evaluated and is in compliance with the 9th Edition (2026) Florida Building Code (FBC) structural requirements excluding the "High Velocity Hurricane Zone" (HVHZ).
2. Product anchors shall be as listed and spaced as shown on details. Anchor embedment to base material shall be beyond wall dressing or stucco.
3. When used in areas requiring wind borne debris protection this product complies with FBC Sections 1609.1.2 & R301.2.1.2 and does not require an impact resistant covering. This product meets missile level "D" and excludes Wind Zone 4 as defined in ASTM E1996.
4. For 2x stud framing construction, anchoring of these units shall be the same as that shown for 2x buck masonry construction.
5. Site conditions that deviate from the details of this drawing require further engineering analysis by a licensed engineer or registered architect.
6. Fiber-Classic & Smooth-Star Door panel require the use of "J" part numbers and must be stained or painted within six months of installation.

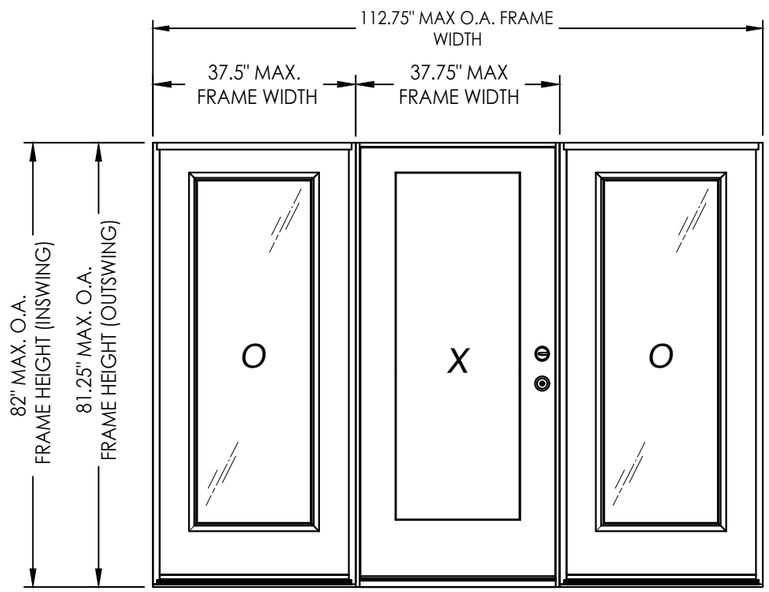

L. F. SCHMIDT LICENSE No. 43409 STATE OF FLORIDA PROFESSIONAL ENGINEER

Digitally signed by Lyndon F Schmidt
Date: 2026.08.10 12:40:28 -04'00'

This item has been digitally signed and sealed by **L. F. Schmidt, P.E.** on the date adjacent to the seal.

Printed copies of this document are not considered signed and sealed and the signature must be verified on any electronic copies.

THIS PRODUCT APPROVAL IS VALID ONLY FOR THE STATE OF FLORIDA

CONFIGURATION	DESIGN PRESSURE (PSF) INSWING		DESIGN PRESSURE (PSF) OUTSWING	
	POSITIVE	NEGATIVE	POSITIVE	NEGATIVE
XO, OX, OXO	+50.0	-55.0	+50.0	-50.0

TABLE OF CONTENTS

SHEET #	DESCRIPTION
1	Typical Elevations, Design Pressures & General Notes
2	Door Panel Details
3	Sidelite Panel Details
4	Elevations
5	Horizontal & Vertical Cross Sections (2X Buck)
6	Horizontal & Vertical Cross Sections (1X Buck)
7	Vertical Cross Sections (Thresholds)
8	Buck Anchoring
9	Frame Anchoring
10	Hardware Details
11	Lite Frame & Glazing Details
12	Bill of Materials & Components

Documents Prepared By:
Lyndon F. Schmidt
P.E. No. 43409
RW BUILDING CONSULTANTS, INC.
P.O. Box 230, Valrico, FL 33595
Phone No.: 813.659.9197
FBPE Registry No. 9813

PRODUCT: THERMA-TRU FIBERGLASS DOOR

PART OR ASSEMBLY: TYPICAL ELEVATION, DESIGN PRESSURES & GENERAL NOTES

REVISIONS

NO.	DATE		BY
2	7/01/26	UPDATE TO 9TH ED. (2026) FBC	LFS
1	7/27/23	UPDATE TO 8TH ED. (2023) FBC	LFS

DATE: 5/18/21
SCALE: N.T.S.
DWG. BY: RW
CHK. BY: LFS
DRAWING NO.: FL-37182.2
SHEET 1 OF 12

© 2021 R.W. BUILDING CONSULTANTS INC.

Z:\2023 FBC Drawings\Therma-Tru\FL-37182 R2\FL-37182.1-3.dwg

NOTE: BOOK, HYBRID & U1 DOORS MAY EACH BE FABRICATED AS WOOD OR COMPOSITE EDGE DOORS.

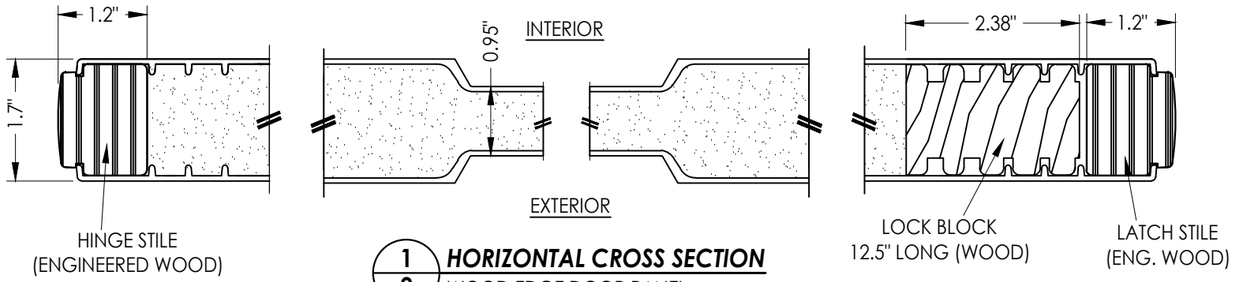

1/2 HORIZONTAL CROSS SECTION
WOOD EDGE DOOR PANEL

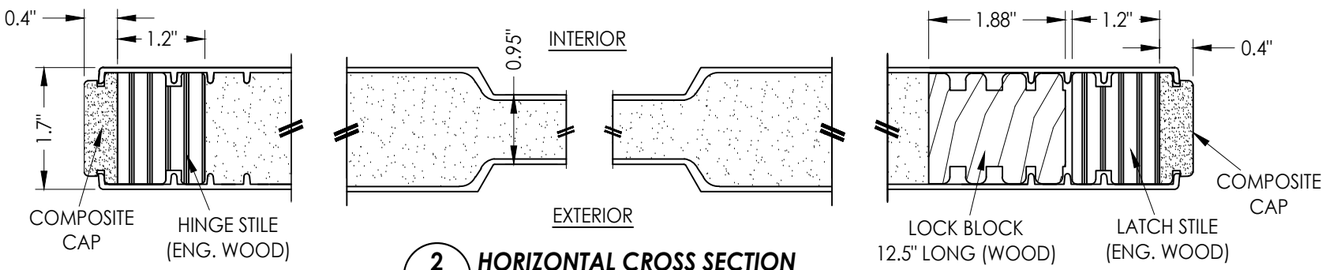

2/2 HORIZONTAL CROSS SECTION
COMPOSITE EDGE DOOR PANEL

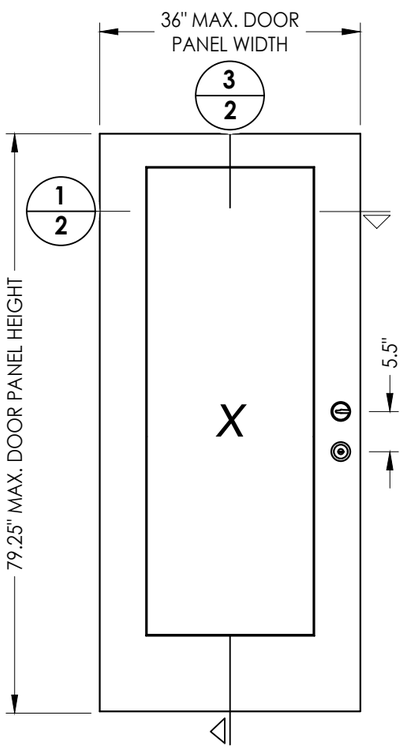

40 FIBERGLASS DOOR PANEL
BOOK DOOR

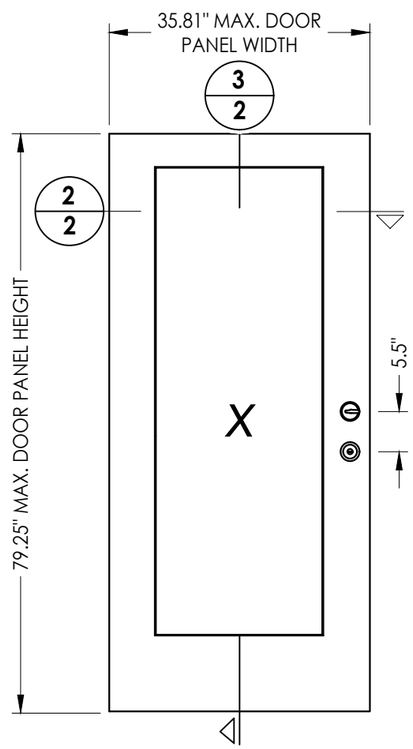

41 FIBERGLASS DOOR PANEL
HYBRID DOOR

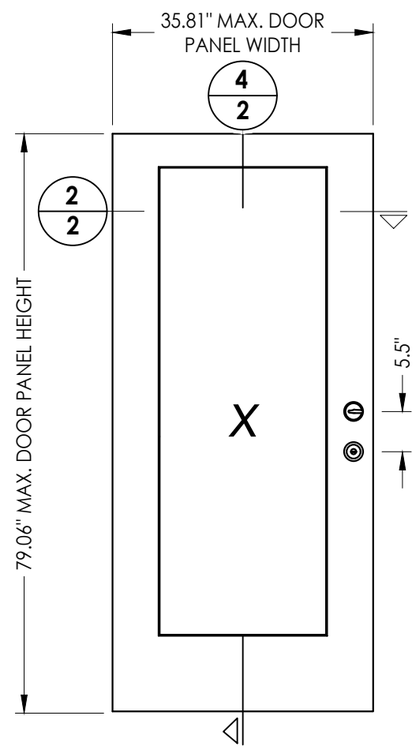

42 FIBERGLASS DOOR PANEL
U1 DOOR

FIBERGLASS SKIN: 0.073" MIN. THK.
FOAM CORE: POLYURETHANE -1.9 PCF MIN.

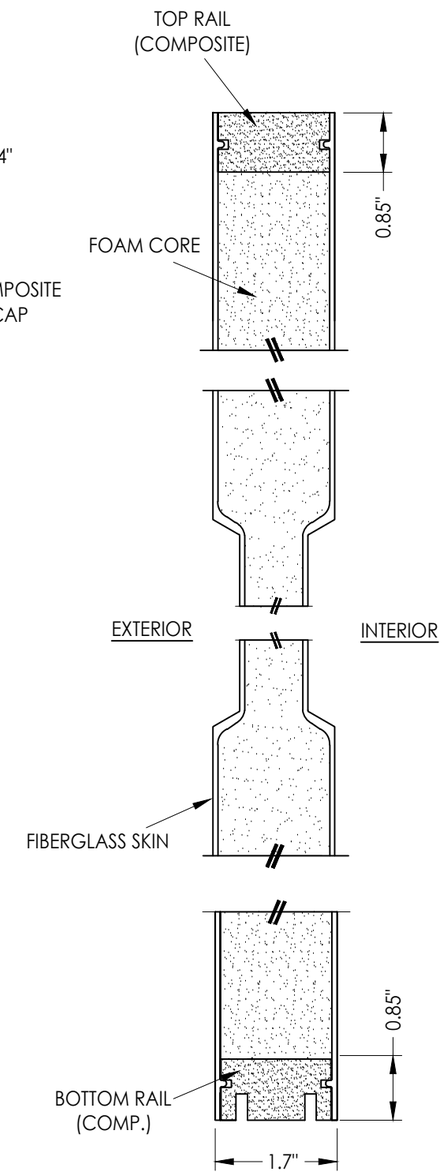

3/2 VERTICAL CROSS SECTION
WOOD EDGE DOOR PANEL

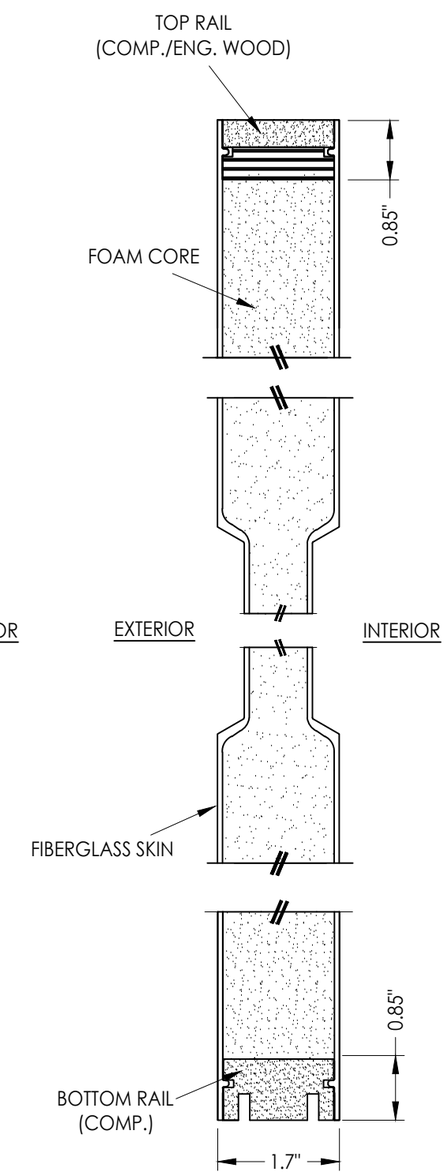

4/2 VERTICAL CROSS SECTION
COMPOSITE EDGE DOOR PANEL

Documents Prepared By:
Lyndon F. Schmidt
P.E. No. 43409
RW BUILDING CONSULTANTS, INC.
P.O. Box 230, Valrico, FL 33595
Phone No.: 813.659.9197
FBPE Registry No. 9813

PRODUCT: THERMA-TRU FIBERGLASS DOOR

PART OR ASSEMBLY: DOOR PANEL DETAILS

NO.	DATE	REVISIONS	BY
2	7/01/26	UPDATE TO 9TH ED. (2026) FBC	LFS
1	7/27/23	UPDATE TO 8TH ED. (2023) FBC	LFS

DATE: 5/18/21
SCALE: N.T.S.
DWG. BY: RW
CHK. BY: LFS
DRAWING NO.: FL-37182.2
SHEET 2 OF 12

© 2021 R.W. Building Consultants Inc.

Z:\2023 FBC Drawings\Therma-Tru\FL-37182 R2\FL-37182.1-3.dwg

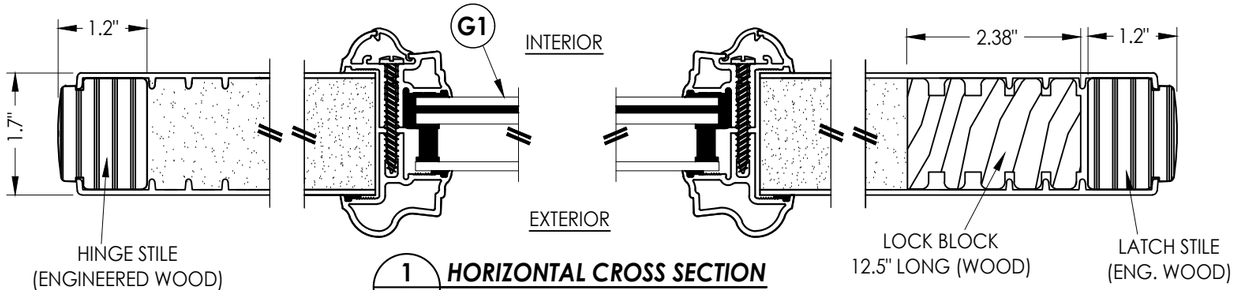

1/3 **HORIZONTAL CROSS SECTION**
WOOD EDGE SIDELITE PANEL

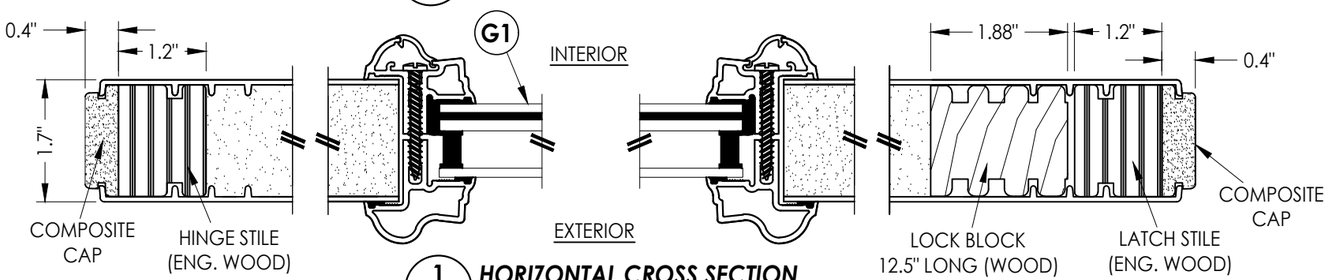

1/3 **HORIZONTAL CROSS SECTION**
COMPOSITE EDGE SIDELITE PANEL

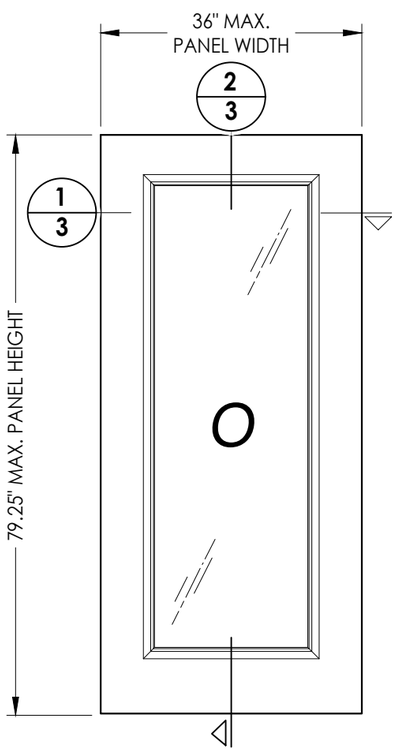

50 **FIBERGLASS SIDELITE PANEL**
WOOD OR COMPOSITE EDGE

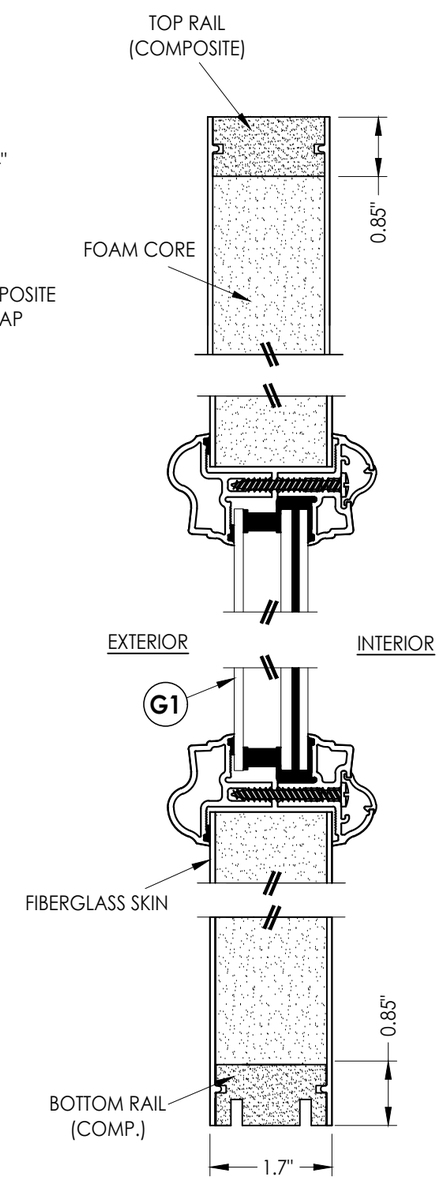

1/3 **VERTICAL CROSS SECTION**
WOOD EDGE SIDELITE PANEL

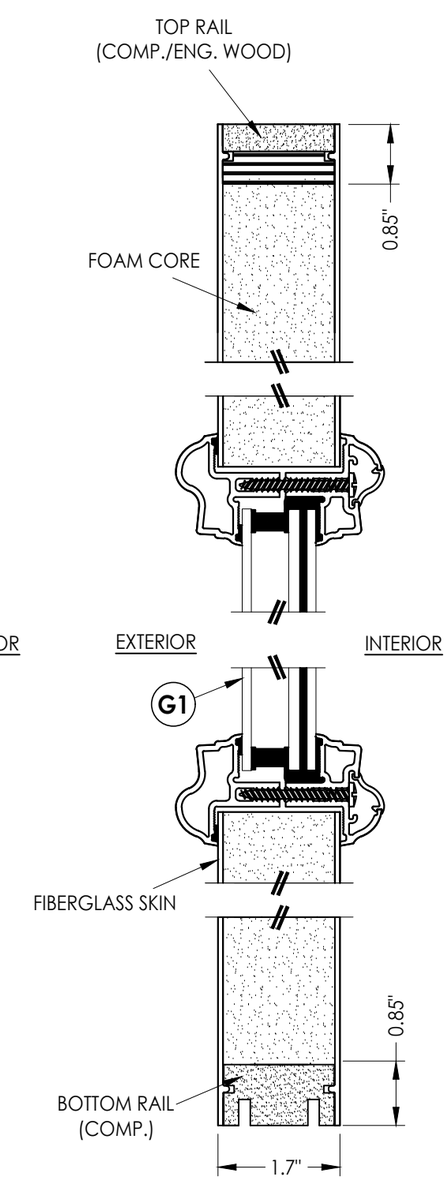

2/3 **VERTICAL CROSS SECTION**
COMPOSITE EDGE SIDELITE PANEL

FIBERGLASS SKIN: 0.073" MIN. THK.
FOAM CORE: POLYURETHANE -1.9 PCF MIN.

Documents Prepared By:
Lyndon F. Schmidt
P.E. No. 43409

RW BUILDING CONSULTANTS, INC.
P.O. Box 230, Valrico, FL 33595
Phone No.: 813.659.9197
FBPE Registry No. 9813

PRODUCT: THERMA-TRU FIBERGLASS DOOR

PART OR ASSEMBLY: SIDELITE PANEL DETAILS

NO.	DATE	REVISIONS	BY
2	7/01/26	UPDATE TO 9TH ED. (2026) FBC	LFS
1	7/27/23	UPDATE TO 8TH ED. (2023) FBC	LFS

DATE: 5/18/21
SCALE: N.T.S.
DWG. BY: RW
CHK. BY: LFS
DRAWING NO.: FL-37182.2
SHEET 3 OF 12

© 2021 R.W. Building Consultants Inc.

Z:\2023 FBC Drawings\Therma-Tru\FL-37182 R2\FL-37182.1-3.dwg

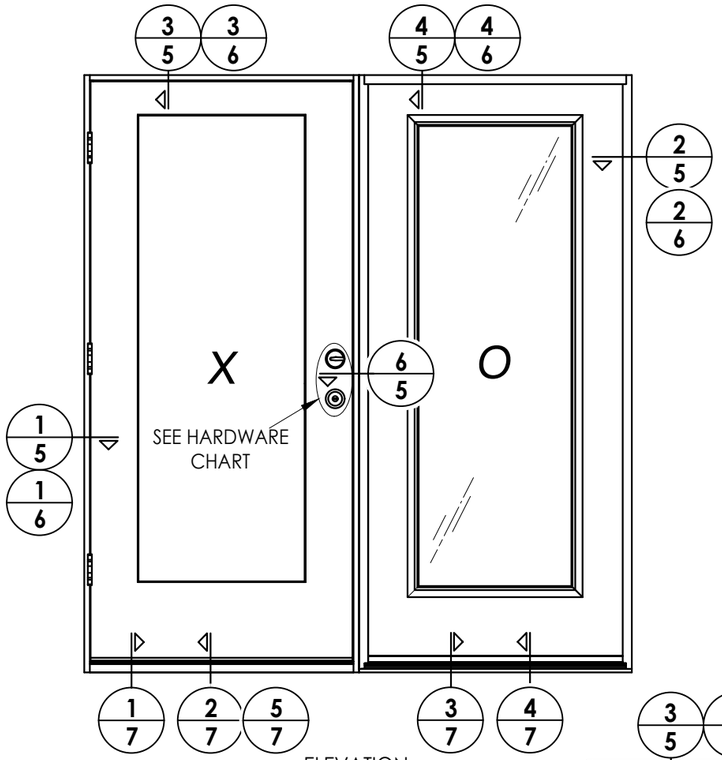

ELEVATION
XO

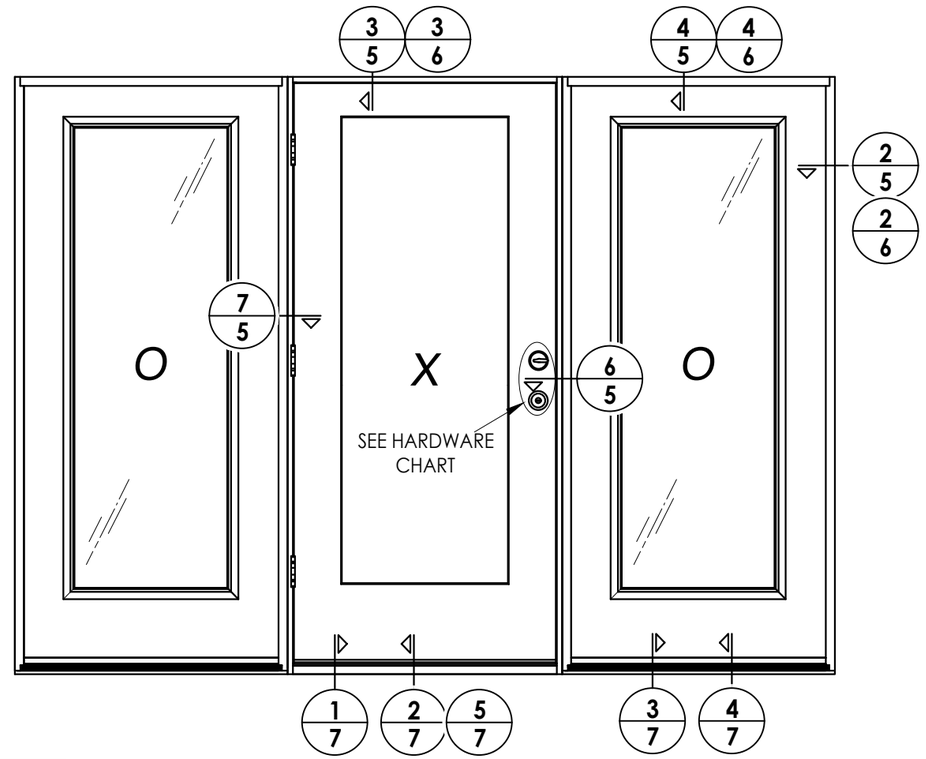

ELEVATION
OXO

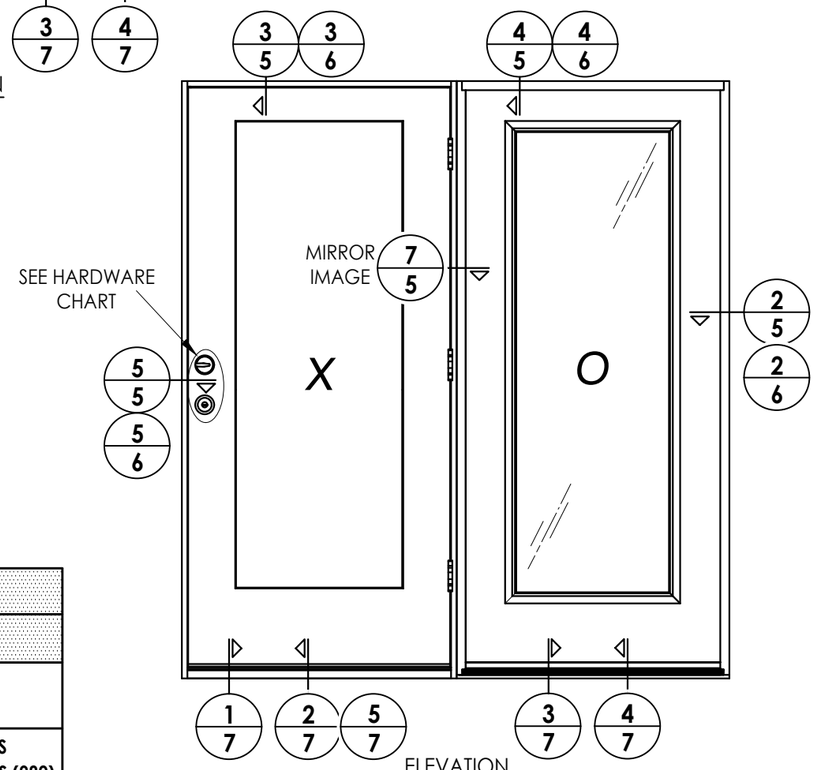

ELEVATION
XO (CENTER HINGE)

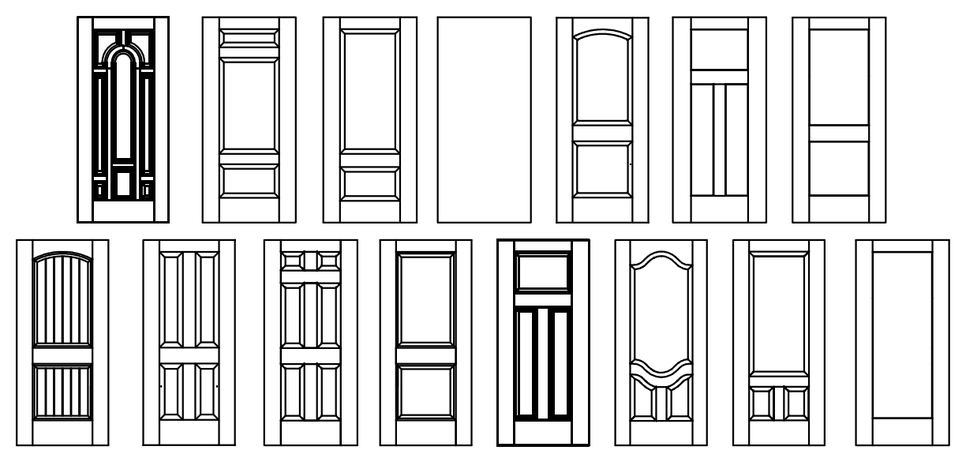

Fiber-Classic/Smooth-Star Door Panel Options

Products approved include all embossed and recessed panel doors.
Similar opaque panel configurations are allowed.
Panels shown are for illustration and are representative only.

HARDWARE TABLE		
MANUFACTURER	MODEL	
SCHLAGE	KNOB:	F51
	DEADBOLT:	B60
KWIKSET	KNOB:	SIGNATURE SERIES
	DEADBOLT:	SIGNATURE SERIES (980)

Documents Prepared By:
Lyndon F. Schmidt
P.E. No. 43409
RW BUILDING CONSULTANTS, INC.
P.O. Box 230, Valrico, FL 33595
Phone No.: 813.659.9197
FBPE Registry No. 9813

PRODUCT: THERMA-TRU FIBERGLASS DOOR

PART OR ASSEMBLY: ELEVATIONS

REVISIONS

NO.	DATE		BY
2	7/01/26	UPDATE TO 9TH ED. (2026) FBC	LFS
1	7/27/23	UPDATE TO 8TH ED. (2023) FBC	LFS

DATE: 5/18/21
SCALE: N.T.S.
DWG. BY: RW
CHK. BY: LFS
DRAWING NO.: FL-37182.2
SHEET 4 OF 12

© 2021 R.W. BUILDING CONSULTANTS INC.

Z:\2023 FBC Drawings\Therma-Tru\FL-37182 R2\FL-37182.1-3.dwg

Notes:
1. Sidelite assembly screws located 6" from each end and 5 more screws equally spaced between (7 screws total per side jamb).
2. Sidelite assembly screws located 3" from each end and @ centerline (3 screws along head jamb).
3. PVC/Wood Moulding secured w/ 16 GA. X 1" brad nails located 1" from ends & 10" o.c. max.

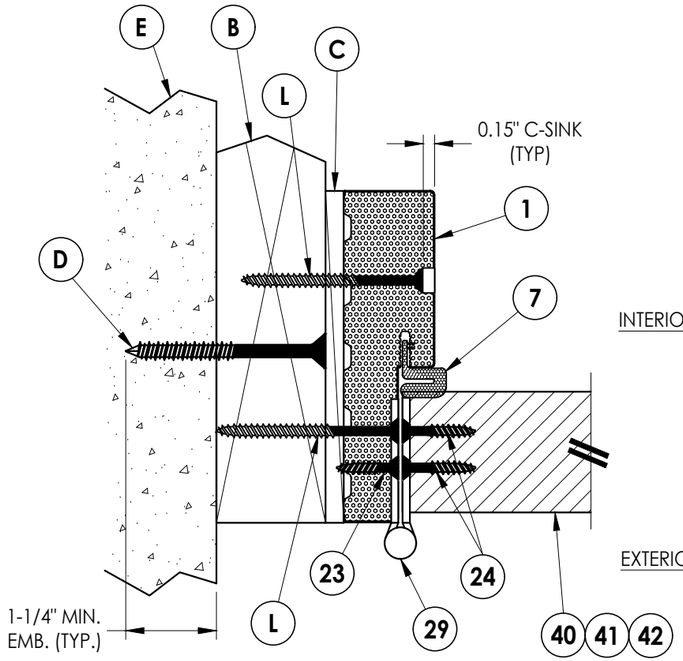

1/5 **HORIZONTAL CROSS SECTION**
Shown w/ 2X Buck
Outswing shown (Inswing similar)

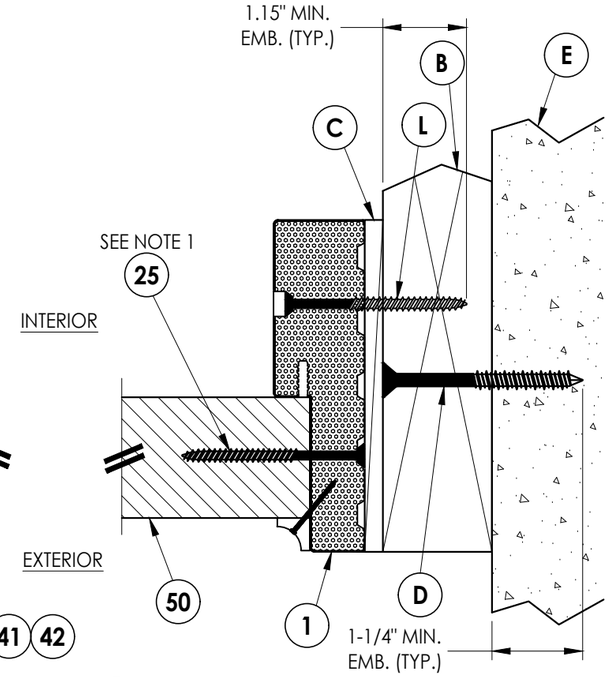

2/5 **HORIZONTAL CROSS SECTION**
Shown w/ 2X Buck
Outswing shown (Inswing similar)

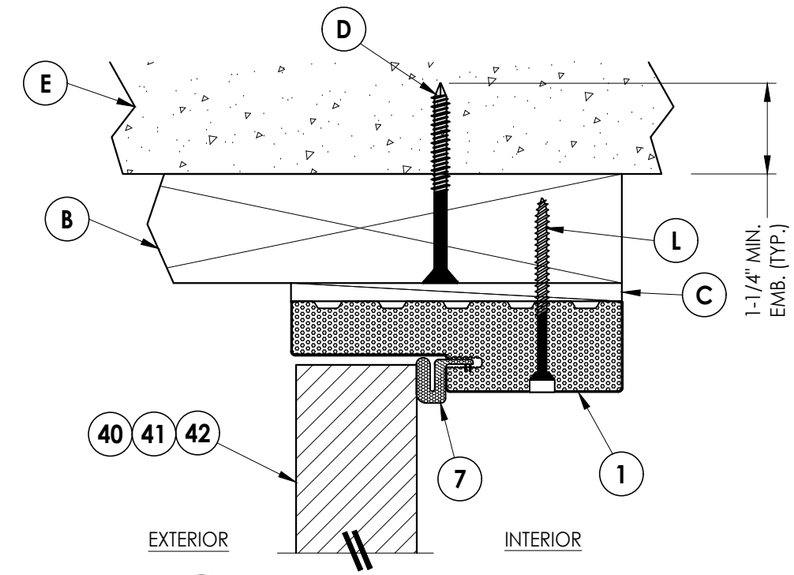

3/5 **VERTICAL CROSS SECTION**
Shown w/ 2X Buck
Outswing shown (Inswing similar)

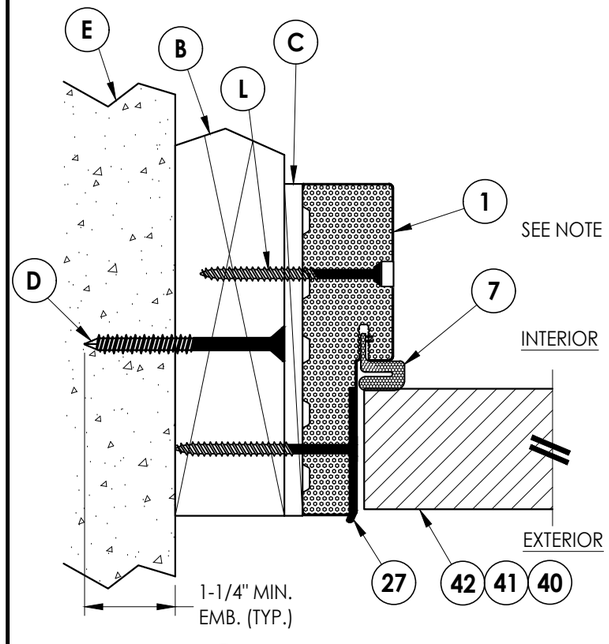

5/5 **HORIZONTAL CROSS SECTION**
Shown w/ 2X Buck
Outswing shown (Inswing similar)

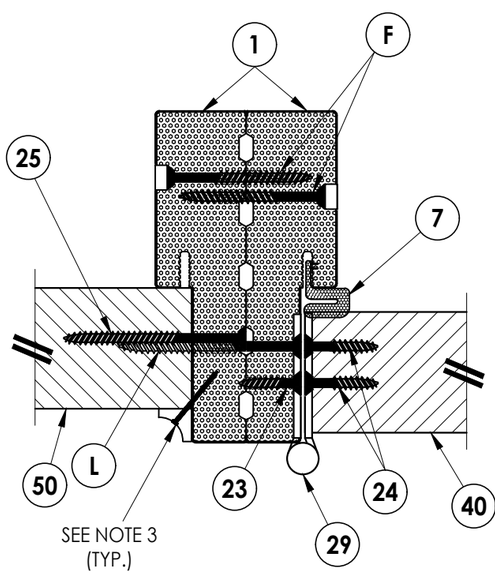

7/5 **HORIZONTAL CROSS SECTION**
Outswing shown (Inswing similar)

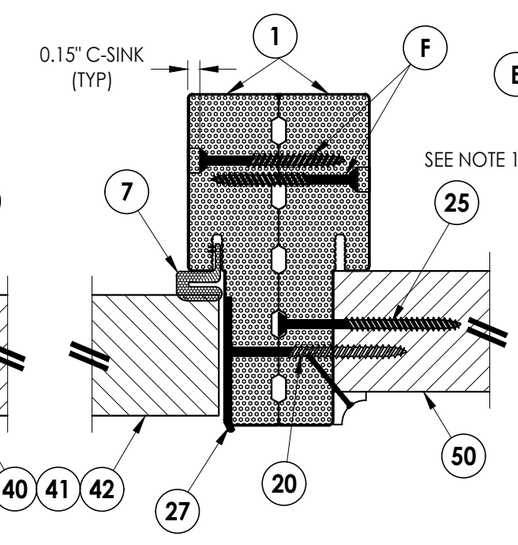

6/5 **HORIZONTAL CROSS SECTION**
Outswing shown (Inswing similar)

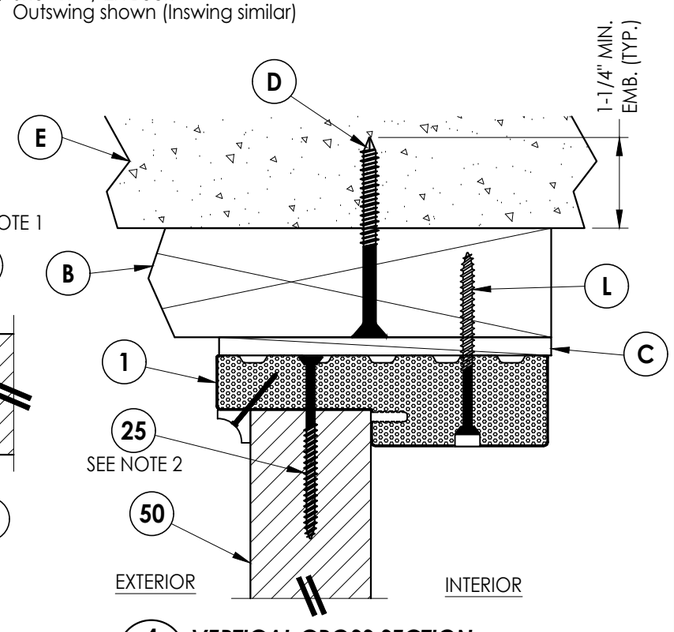

4/5 **VERTICAL CROSS SECTION**
Shown w/ 2X Buck
Outswing shown (Inswing similar)

Documents Prepared By:
Lyndon F. Schmidt
P.E. No. 43409
RW BUILDING CONSULTANTS, INC.
P.O. Box 230, Valrico, FL 33595
Phone No.: 813.659.9197
FBPE Registry No. 9813

PRODUCT: THERMA-TRU FIBERGLASS DOOR

PART OR ASSEMBLY: HORIZONTAL & VERTICAL CROSS SECTIONS (2X BUCK)

REVISIONS

NO.	DATE		BY
2	7/01/26	UPDATE TO 9TH ED. (2026) FBC	LFS
1	7/27/23	UPDATE TO 8TH ED. (2023) FBC	LFS

DATE: 5/18/21
SCALE: N.T.S.
DWG. BY: RW
CHK. BY: LFS
DRAWING NO.: FL-37182.2
SHEET 5 OF 12

© 2021 R.W. BUILDING CONSULTANTS INC.

Z:\2023 FBC Drawings\Therma-Tru\FL-37182 R2\FL-37182.1-3.dwg

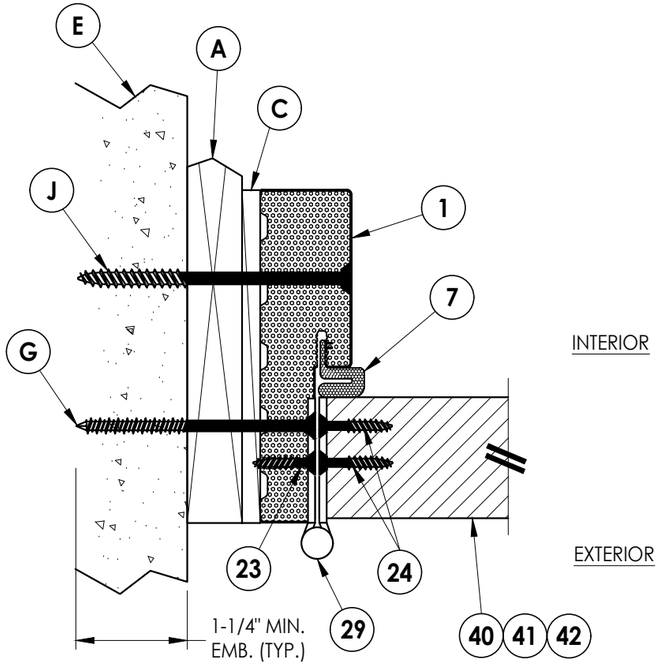

1/6 HORIZONTAL CROSS SECTION
Shown w/ 1X sub-buck
Outswing shown (Inswing similar)

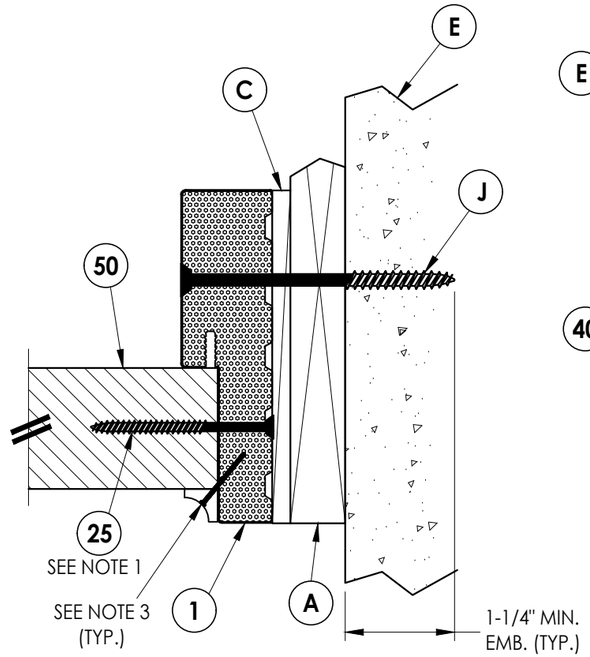

2/6 HORIZONTAL CROSS SECTION
Shown w/ 1X sub-buck
Outswing shown (Inswing similar)

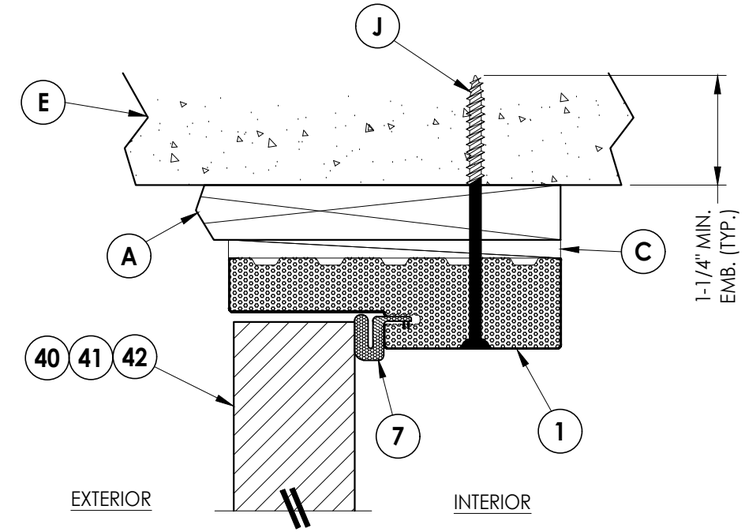

3/6 VERTICAL CROSS SECTION
Shown w/ 1X sub-buck
Outswing shown (Inswing similar)

Notes:
1. Sidelite assembly screws located 6" from each end and 5 more screws equally spaced between (7 screws total per side jamb).
2. Sidelite assembly screws located 3" from each end and @ centerline (3 screws along head jamb).
3. PVC/Wood Moulding secured w/ 16 GA. X 1" brad nails located 1" from ends & 10" o.c. max.

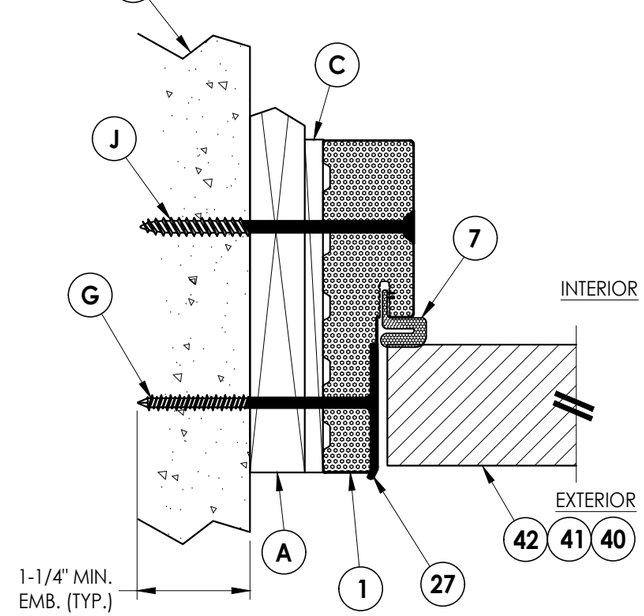

5/6 HORIZONTAL CROSS SECTION
Shown w/ 1X sub-buck
Outswing shown (Inswing similar)

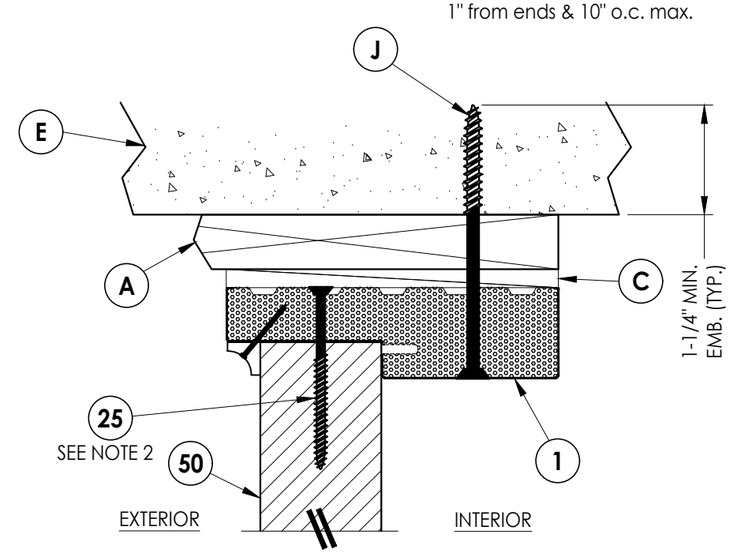

4/6 VERTICAL CROSS SECTION
Shown w/ 1X sub-buck
Outswing shown (Inswing similar)

Documents Prepared By:
Lyndon F. Schmidt
P.E. No. 43409

RW BUILDING CONSULTANTS, INC.
P.O. Box 230, Valrico, FL 33595
Phone No.: 813.659.9197
FBPE Registry No. 9813

PRODUCT: THERMA–TRU FIBERGLASS DOOR

PART OR ASSEMBLY: HORIZONTAL & VERTICAL CROSS SECTIONS (1X BUCK)

REVISIONS

NO.	DATE	BY
2	7/01/26 UPDATE TO 9TH ED. (2026)	FBC LFS
1	7/27/23 UPDATE TO 8TH ED. (2023)	FBC LFS

DATE: 5/18/21
SCALE: N.T.S.
DWG. BY: RW
CHK. BY: LFS
DRAWING NO.: FL–37182.2
SHEET 6 OF 12

© 2021 R.W. BUILDING CONSULTANTS INC.

Z:\2023 FBC Drawings\Therma-Tru\FL-37182 R2\FL-37182.1-3.dwg

Notes:
1. Sill Item #32 is attached to jambs w/ (3) #8 X 2-1/2" pfh screws at each end.
   Sill Item #33 is attached to jambs w/ (2) #8 X 2-1/2" pfh screws at each end.
   Sill Item #34 is attached to jambs utilizing (2) #10 X 2" pph SMS at each end.
2. Sidelite assembly screws located 3" from each end and @ centerline
   (3 screws along sill).

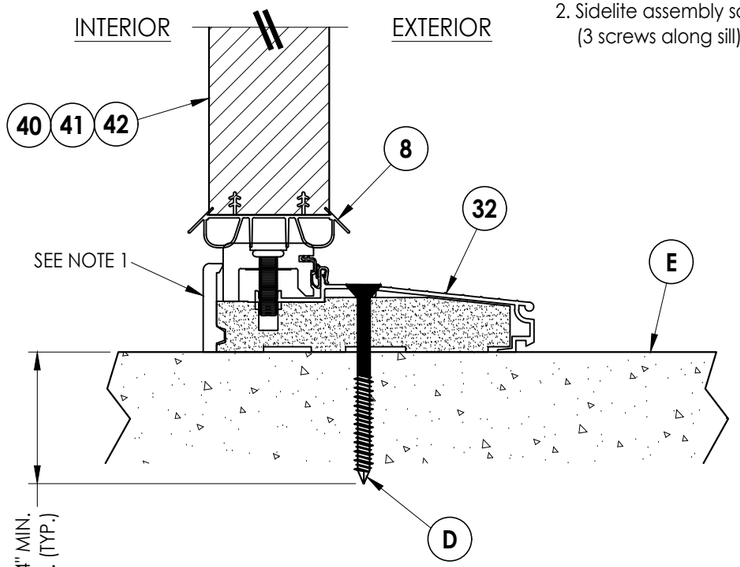

1/7 **VERTICAL CROSS SECTION**
Inswing Sill

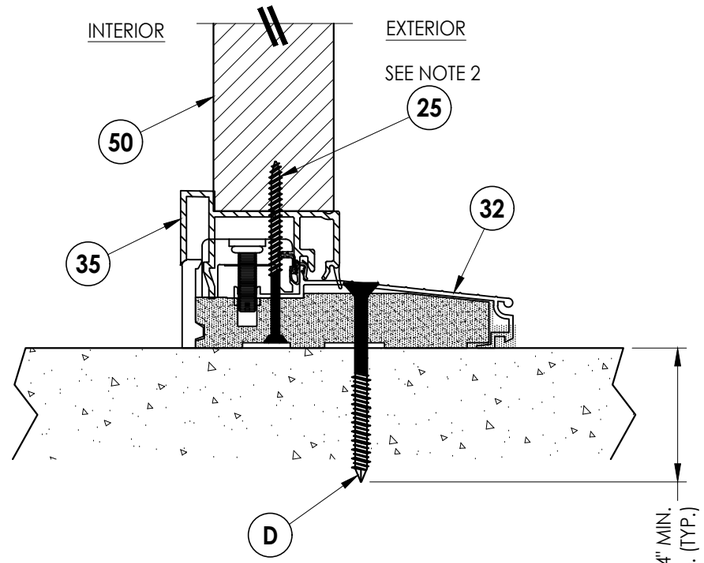

3/7 **VERTICAL CROSS SECTION**
Inswing Sill

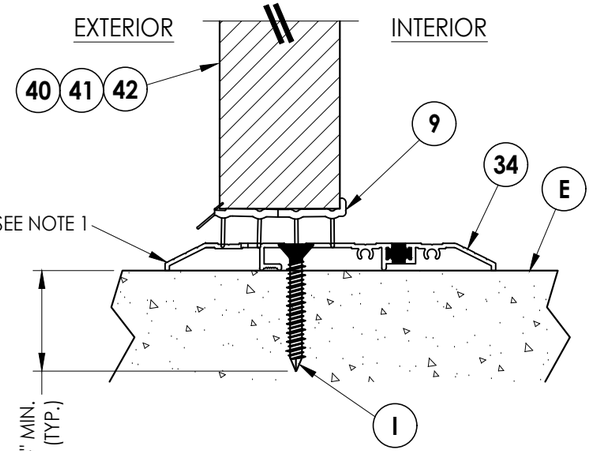

5/7 **VERTICAL CROSS SECTION**
Outswing Sill

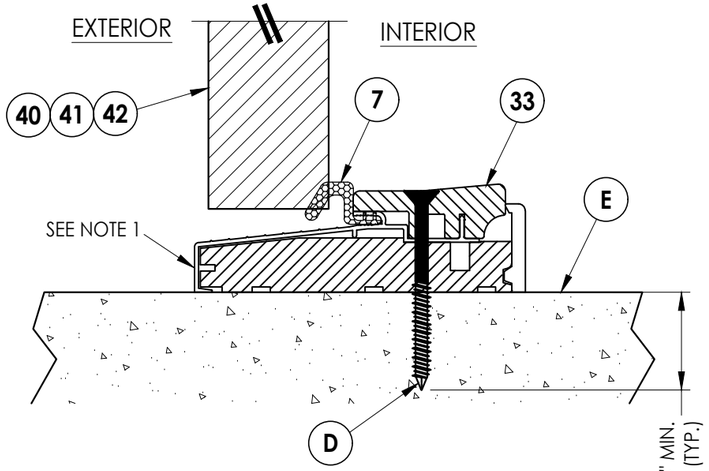

2/7 **VERTICAL CROSS SECTION**
Outswing Sill

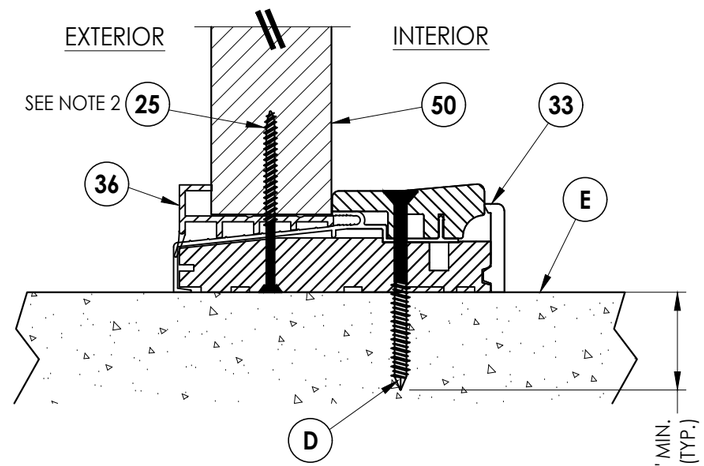

4/7 **VERTICAL CROSS SECTION**
Outswing Sill

Documents Prepared By:
Lyndon F. Schmidt
P.E. No. 43409

RW BUILDING CONSULTANTS, INC.
P.O. Box 230, Valrico, FL 33595
Phone No.: 813.659.9197
FBPE Registry No. 9813

PRODUCT: THERMA-TRU FIBERGLASS DOOR

PART OR ASSEMBLY: VERTICAL CROSS SECTIONS (THRESHOLDS)

NO.	DATE	REVISIONS	BY
2	7/01/26	UPDATE TO 9TH ED. (2026) FBC	LFS
1	7/27/23	UPDATE TO 8TH ED. (2023) FBC	LFS

DATE: 5/18/21
SCALE: N.T.S.
DWG. BY: RW
CHK. BY: LFS
DRAWING NO.: FL-37182.2
SHEET 7 OF 12

© 2021 R.W. BUILDING CONSULTANTS INC.

Z:\2023 FBC Drawings\Therma-Tru\FL-37182 R2\FL-37182.1-3.dwg

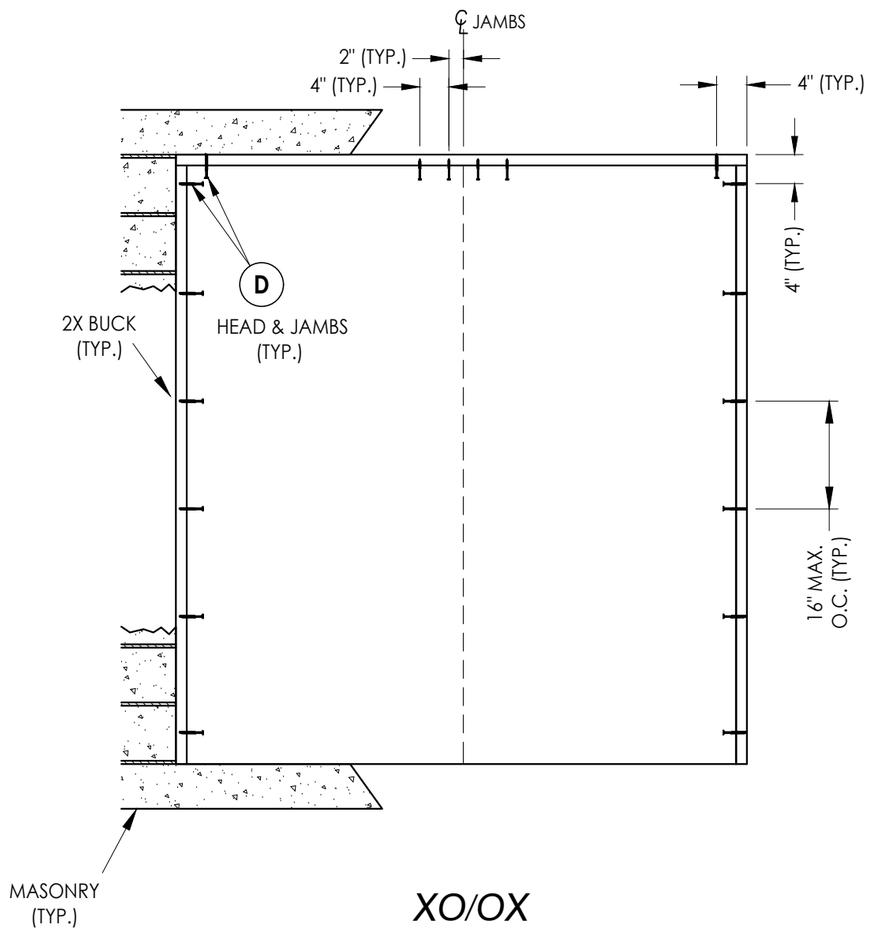

XO/OX

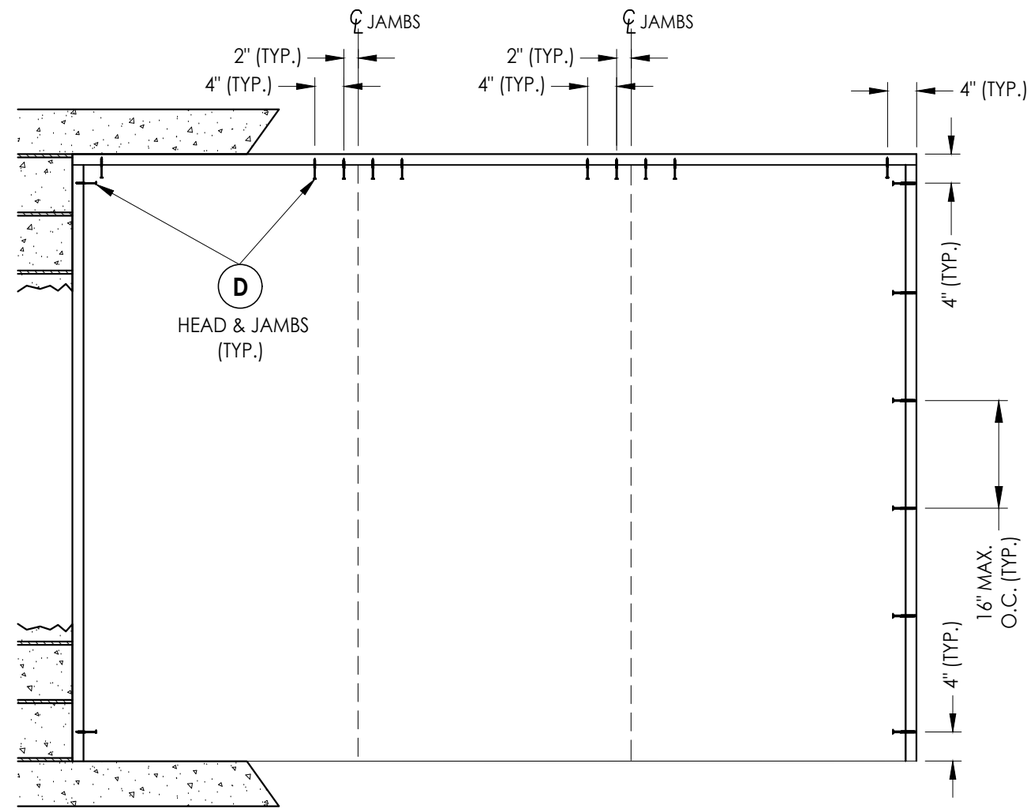

OXO

2X BUCK ANCHORING

Documents Prepared By:
Lyndon F. Schmidt
P.E. No. 43409

RW BUILDING CONSULTANTS, INC.
P.O. Box 230, Valrico, FL 33595
Phone No.: 813.659.9197
FBPE Registry No. 9813

PRODUCT: THERMA-TRU FIBERGLASS DOOR

PART OR ASSEMBLY: BUCK ANCHORING

NO.	DATE	REVISIONS	BY
2	7/01/26	UPDATE TO 9TH ED. (2026) FBC	LFS
1	7/27/23	UPDATE TO 8TH ED. (2023) FBC	LFS

DATE: 5/18/21
SCALE: N.T.S.
DWG. BY: RW
CHK. BY: LFS
DRAWING NO.: FL-37182.2
SHEET 8 OF 12

© 2021 R.W. Building Consultants Inc.

Z:\2023 FBC Drawings\Therma-Tru\FL-37182 R2\FL-37182.1-3.dwg

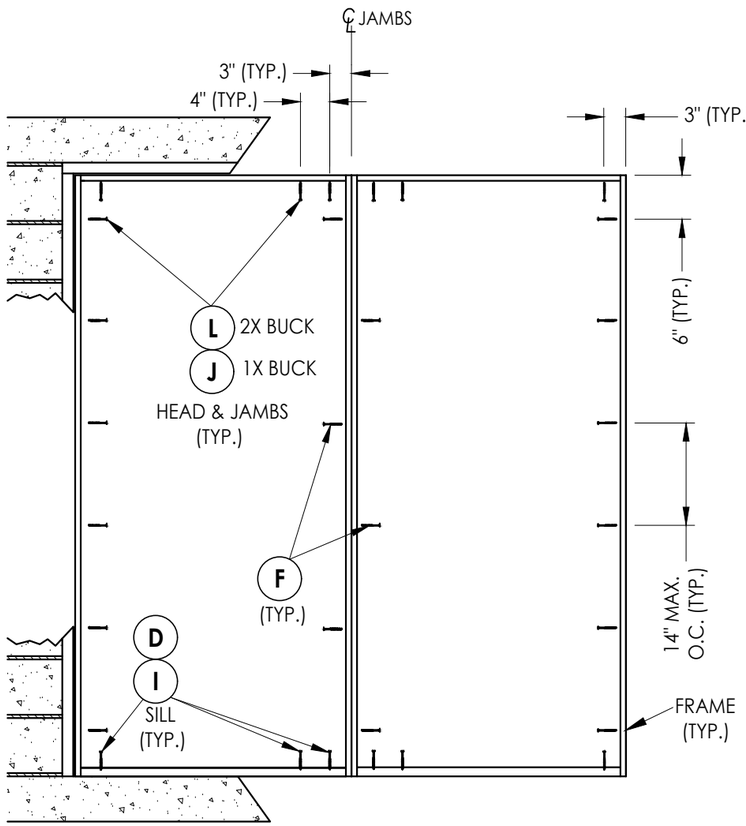

XO/OX

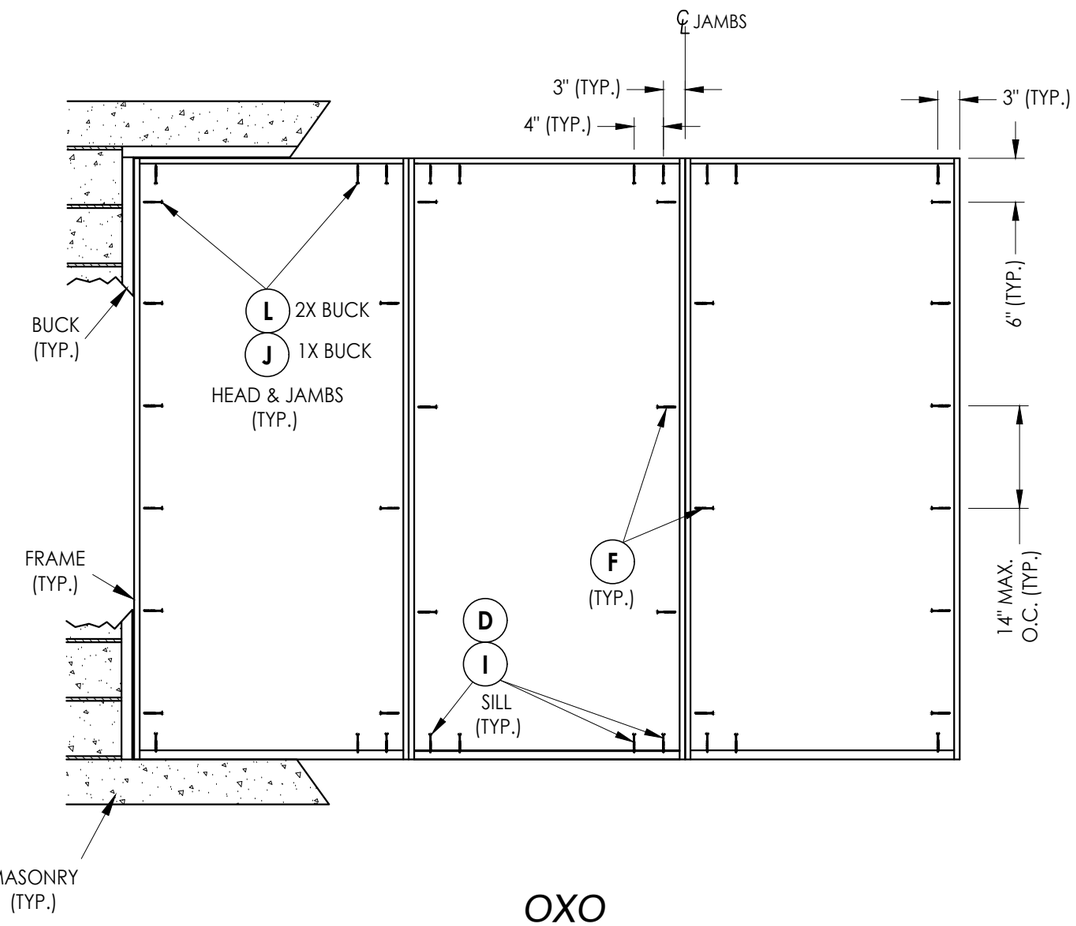

OXO

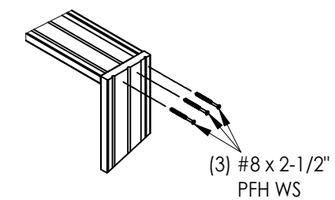

JAMB TO HEAD DETAIL
(TYP.)

FRAME ANCHORING

Documents Prepared By:
Lyndon F. Schmidt
P.E. No. 43409

RW BUILDING CONSULTANTS, INC.
P.O. Box 230, Valrico, FL 33595
Phone No.: 813.659.9197
FBPE Registry No. 9813

PRODUCT: THERMA-TRU FIBERGLASS DOOR

PART OR ASSEMBLY: FRAME ANCHORING

NO.	DATE	REVISIONS	BY
2	7/01/26	UPDATE TO 9TH ED. (2026) FBC	LFS
1	7/27/23	UPDATE TO 8TH ED. (2023) FBC	LFS

DATE: 5/18/21
SCALE: N.T.S.
DWG. BY: RW
CHK. BY: LFS
DRAWING NO.: FL-37182.2
SHEET 9 OF 12

© 2021 R.W. BUILDING CONSULTANTS INC.

Z:\2023 FBC Drawings\Therma-Tru\FL-37182 R2\FL-37182.1-3.dwg

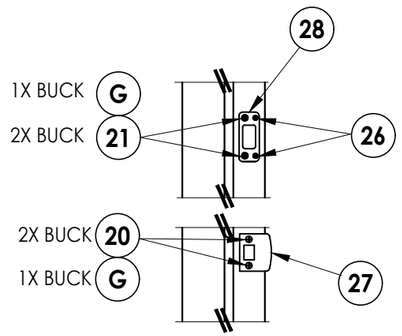

LATCH & DEADBOLT DETAIL
Kwikset

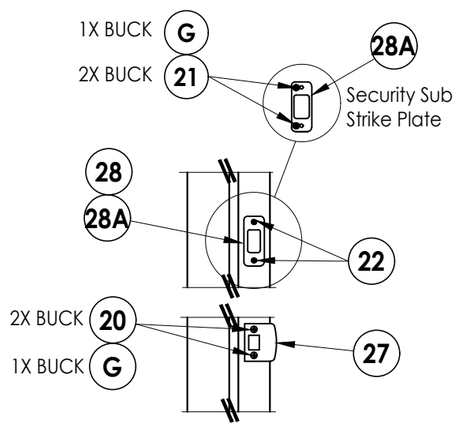

LATCH & DEADBOLT DETAIL
Schlage

LATCH & DEADBOLT STRIKE DETAILS

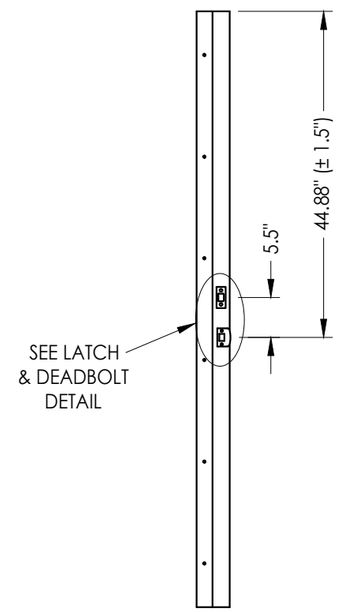

STRIKE JAMB
Latch and Deadbolt

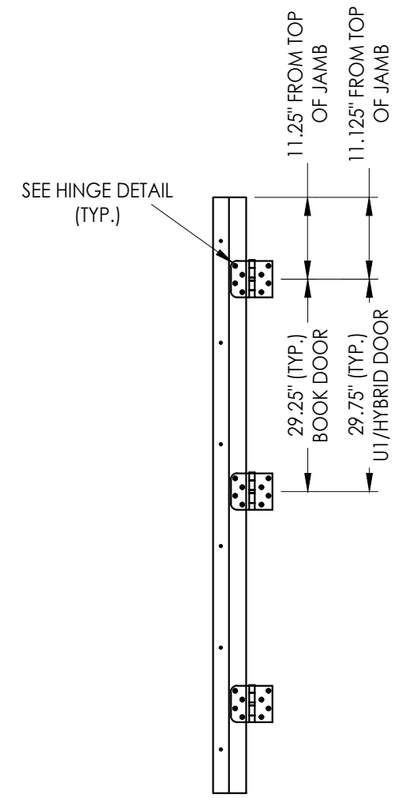

HINGE JAMB

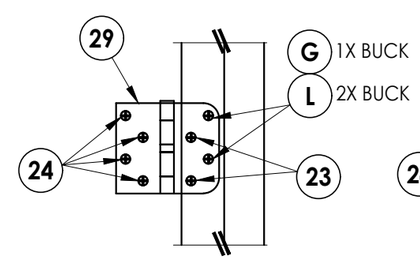

HINGE DETAIL
Inswing

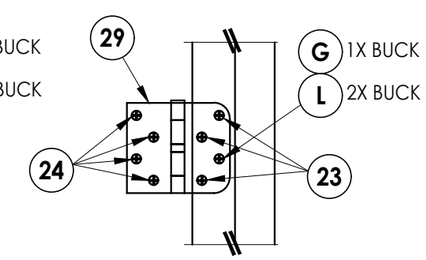

HINGE DETAIL
Outswing

Documents Prepared By:
Lyndon F. Schmidt
P.E. No. 43409
RW BUILDING CONSULTANTS, INC.
P.O. Box 230, Valrico, FL 33595
Phone No.: 813.659.9197
FBPE Registry No. 9813

PRODUCT: THERMA-TRU FIBERGLASS DOOR

PART OR ASSEMBLY: HARDWARE DETAILS

REVISIONS

NO.	DATE		BY
2	7/01/26	UPDATE TO 9TH ED. (2026) FBC	LFS
1	7/27/23	UPDATE TO 8TH ED. (2023) FBC	LFS

DATE: 5/18/21
SCALE: N.T.S.
DWG. BY: RW
CHK. BY: LFS
DRAWING NO.: FL-37182.2
SHEET 10 OF 12

© 2021 R.W. Building Consultants Inc.

Z:\2023 FBC Drawings\Therma-Tru\FL-37182 R2\FL-37182.1-3.dwg

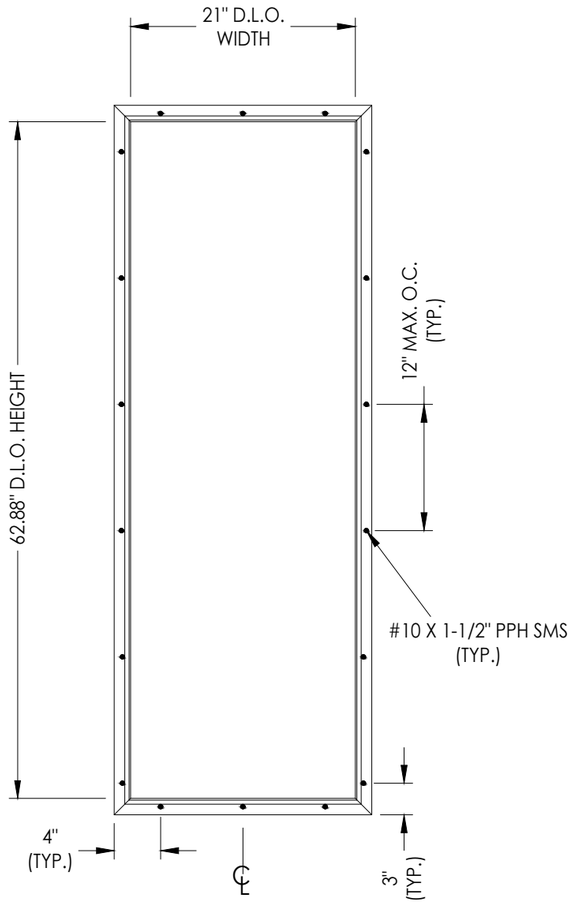

3A ALUMINUM LITE FRAME
(w/ 1" Glazing)

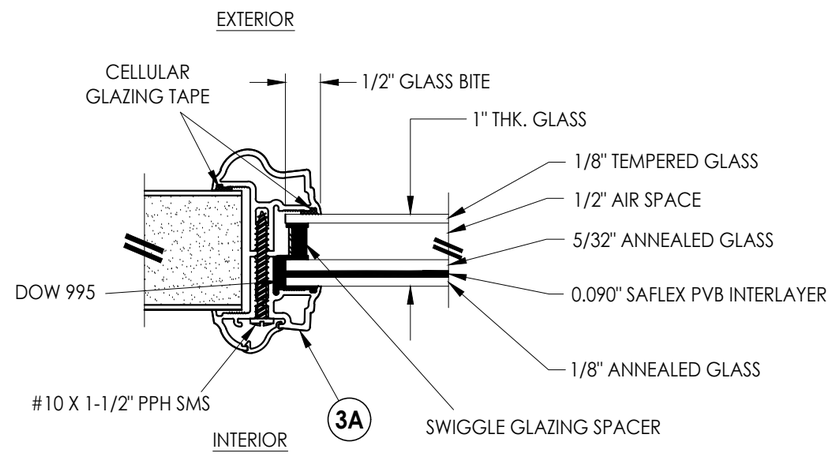

G1 ***GLAZING DETAIL***
Aluminum Impact Lite Frame

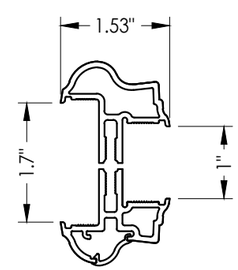

3A ***ALUMINUM FRAME***
Aluminum Impact Lite Frame

Documents Prepared By:
Lyndon F. Schmidt
P.E. No. 43409

RW BUILDING CONSULTANTS, INC.
P.O. Box 230, Valrico, FL 33595
Phone No.: 813.659.9197
FBPE Registry No. 9813

PRODUCT: *THERMA–TRU FIBERGLASS DOOR*

PART OR ASSEMBLY: *LITE FRAME & GLAZING DETAILS*

NO.	DATE		BY
2	7/01/26	UPDATE TO 9TH ED. (2026) FBC	LFS
1	7/27/23	UPDATE TO 8TH ED. (2023) FBC	LFS

REVISIONS

DATE: 5/18/21
SCALE: N.T.S.
DWG. BY: RW
CHK. BY: LFS
DRAWING NO.: FL–37182.2
SHEET 11 OF 12

© 2021 R.W. Building Consultants Inc.

Z:\2023 FBC Drawings\Therma-Tru\FL-37182 R2\FL-37182.1-3.dwg

BILL OF MATERIALS

ITEM #	DESCRIPTION	MATERIAL
A	1X BUCK (G >= 0.42)	WOOD
B	2X BUCK (G >= 0.42)	WOOD
C	1/4" MAX. SHIM SPACE	-
D	1/4" X 2-3/4" PFH DeWALT OR ITW CONCRETE SCREW	STEEL
E	MASONRY - 3,000 PSI MIN. CONCRETE CONFORMING TO ACI 301 OR HOLLOW BLOCK CONFORMING TO ASTM C90	CONCRETE
F	#10 X 2" PFH WOOD SCREW	STEEL
G	3/16" X 3-1/4" PFH ITW CONCRETE SCREW	STEEL
I	1/4" X 2-1/4" PFH DeWALT OR ITW CONCRETE SCREW	STEEL
J	1/4" X 3-3/4" PFH DeWALT OR ITW CONCRETE SCREW	STEEL
L	#10 X 2-1/2" PFH WOOD SCREW (1.15" MIN. EMBEDMENT)	STEEL
1	COMPOSITE JAMB	COMP
7	WEATHERSTRIP	FOAM
8	DOOR SWEEP	VINYL
9	SWEEP (USE w/ PUBLIC ACCESS THRESHOLD)	VINYL
20	#8 X 2-1/2" PFH WOOD SCREW	STEEL
21	#12 X 1-1/2" PFH WOOD SCREW	STEEL
22	#8 X 3/4" PFH WOOD SCREW	STEEL
23	#9 X 3/4" PFH WOOD SCREW	STEEL
24	#9 X 1" PFH WOOD SCREW	STEEL
25	#9 X 2-1/2" PFH WOOD SCREW	STEEL
26	#8 X 5/8" PFH WOOD SCREW	STEEL
27	LATCH STRIKE PLATE	STEEL
28	DEADBOLT STRIKE PLATE	STEEL
28A	DEADBOLT SUB-STRIKE PLATE	STEEL
29	4" X 4" HINGE	STEEL
32	INSWING THRESHOLD	ALUM/COMP
33	OUTSWING THRESHOLD	ALUM/COMP
34	PUBLIC ACCESS THRESHOLD	ALUM
35	SIDELITE SPACER (INSWING)	VINYL
36	SIDELITE SPACER (OUTSWING)	VINYL
40	DOOR PANEL (BOOK)	-
41	DOOR PANEL (HYBRID)	-
42	DOOR PANEL (U1)	-
50	SIDELITE PANEL	-

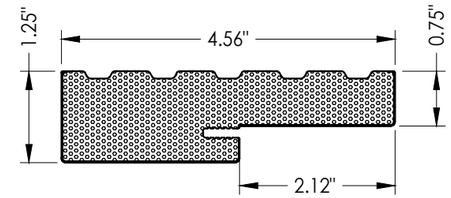

1 **COMPOSITE JAMB**

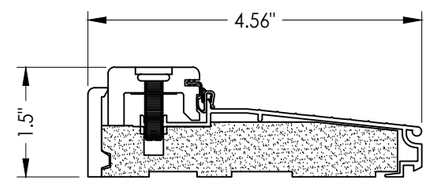

32 **INSWING THRESHOLD**
Adjustable Composite Sill

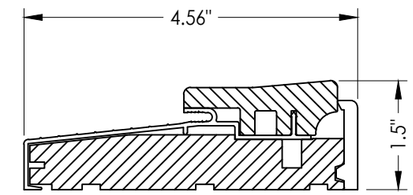

33 **OUTSWING THRESHOLD**
Composite Sill

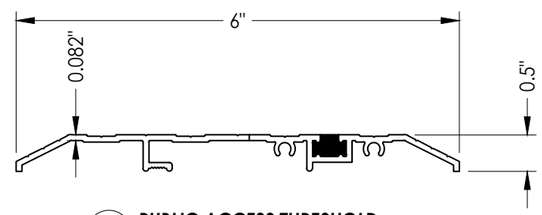

34 **PUBLIC ACCESS THRESHOLD**

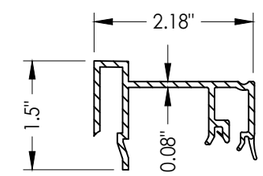

35 **SIDELITE SPACER**
Inswing

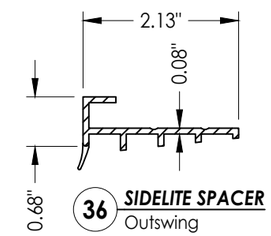

36 **SIDELITE SPACER**
Outswing

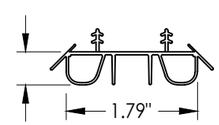

8 **SWEEP**

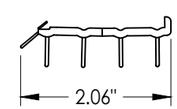

9 **SWEEP**

CORROSION RESISTANCE - SALTWATER ENVIRONMENTS
Fasteners & connectors in areas within 3000 ft (914 m) of a saltwater coastline shall comply with FBC Sections 1711.1 or R332.1.

CONCRETE ANCHOR NOTES:

1. *Concrete anchor locations at the corners may be adjusted to maintain the min. edge distance to mortar joints.*
2. *Concrete anchor locations noted as "MAX. ON CENTER" must be adjusted to maintain the min. edge distance to mortar joints, additional concrete anchors may be required to ensure the "MAX. ON CENTER" dimension are not exceeded.*
3. *Concrete anchor table:*

ANCHOR TYPE	ANCHOR SIZE	MIN. EMBEDMENT	MIN. CLEARANCE TO MASONRY EDGE	MIN. CLEARANCE TO ADJACENT ANCHOR
ITW TAPCON®	1/4"	1-1/4"	2"	4"
DeWALT ULTRACON+®	1/4"	1-1/4"	1"	4"
ITW TAPCON®	3/16"	1-1/4"	AS SHOWN	1-1/2"

WOOD SCREW INSTALLATION NOTES:

1. *Maintain a minimum 5/8" edge distance, 1" end distance, & 1" o.c. spacing of wood screws to prevent the splitting of wood.*

Documents Prepared By:
Lyndon F. Schmidt
P.E. No. 43409
RW BUILDING CONSULTANTS, INC.
P.O. Box 230, Valrico, FL 33595
Phone No.: 813.659.9197
FBPE Registry No. 9813

PRODUCT: THERMA-TRU FIBERGLASS DOOR

PART OR ASSEMBLY: BILL OF MATERIALS & COMPONENTS

NO.	DATE		BY
2	7/01/26	UPDATE TO 9TH ED. (2026) FBC	LFS
1	7/27/23	UPDATE TO 8TH ED. (2023) FBC	LFS

REVISIONS

DATE: 5/18/21
SCALE: N.T.S.
DWG. BY: RW
CHK. BY: LFS
DRAWING NO.: FL-37182.2
SHEET 12 OF 12

© 2021 R.W. Building Consultants Inc.

Z:\2023 FBC Drawings\Therma-Tru\FL-37182 R2\FL-37182.1-3.dwg